THE INFORMATION CONTAINED IN THIS DRAWING IS THE SOLE PROPERTY OF ANDERSON POWER PRODUCTS. ANY REPRODUCTION IN PART OR WHOLE WITHOUT THE WRITTEN PERMISSION OF ANDERSON POWER PRODUCTS IS PROHIBITED.

REV.	DESCRIPTION OF CHANGES	BY:	DATE
9	ECRN 13213: REDRAWN	CMS	6/16/99

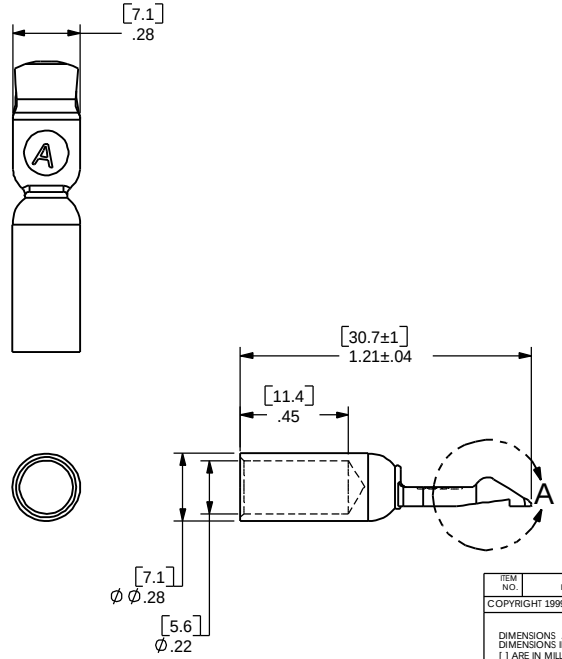

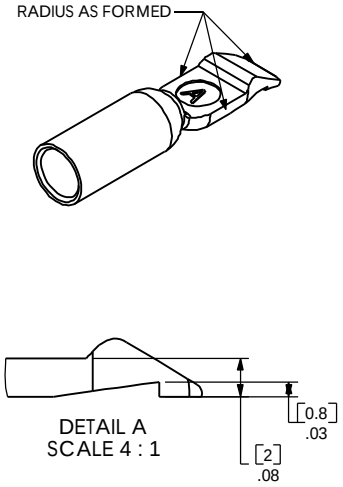

ITEM NO.	PART OR IDENTIFYING NO.	NOMENCLATURE OR DESCRIPTION	MATERIAL SPECIFICATION	QTY REQD

COPYRIGHT 1999 ANDERSON POWER PRODUCTS. ALL RIGHTS RESERVED. UNAUTHORIZED REPRODUCTION HEREBY PROHIBITIED.

DIMENSIONS ARE IN INCHES
DIMENSIONS IN PARENTHESES [ ] ARE IN MILLIMETERS

TOLERANCES ARE:
2PL- ±.02 [±.5]

MATERIALS:
COPPER

FINISH
SILVER PLATE

DO NOT SCALE DRAWING

NEXT ASSY | USED ON
APPLICATION

CAD GENERATED DRAWING, DO NOT MANUALLY UPDATE

APPROVALS		DATE
DRAWN	JM	2/27/92
CHECKED	DJD	3/2/92
RESP ENG	CHB	3/2/92
MFG ENG	JR	3/2/92
QUAL ENG	HN	3/2/92

ANDERSON POWER PRODUCTS

CATALOG NUMBER 5900
PP75/ SB50 CONTACT
#6 CABLE MAX.
HIGH DETENT

SIZE A | SPECIFICATION: 1C0608S4 | REV. 9
SCALE NONE | CADFILES/01051 | SHEET 1 OF 1

THE INFORMATION CONTAINED IN THIS DRAWING IS THE SOLE PROPERTY OF ANDERSON POWER PRODUCTS. ANY REPRODUCTION IN PART OR WHOLE WITHOUT THE WRITTEN PERMISSION OF ANDERSON POWER PRODUCTS IS PROHIBITED.

REV.	DESCRIPTION OF CHANGES	BY:	DATE
5	ECRN 13213: REDRAWN	CMS	6/15/99

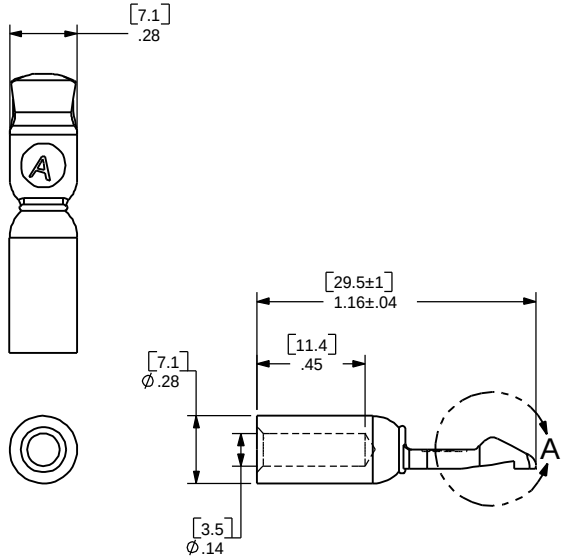

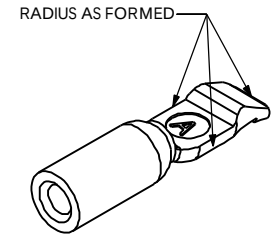

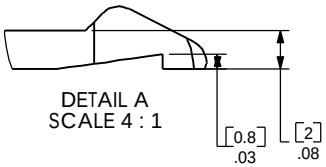

ITEM NO.	PART OR IDENTIFYING NO.	NOMENCLATURE OR DESCRIPTION	MATERIAL SPECIFICATION	QTY REQD

COPYRIGHT 1999 ANDERSON POWER PRODUCTS. ALL RIGHTS RESERVED. UNAUTHORIZED REPRODUCTION HEREBY PROHIBITIED.

DIMENSIONS ARE IN INCHES
DIMENSIONS IN PARENTHESES [ ] ARE IN MILLIMETERS

TOLERANCES ARE:
2PL- ±.02 [±.5]

MATERIALS:
COPPER

FINISH
SILVER PLATE

DO NOT SCALE DRAWING

CAD GENERATED DRAWING, DO NOT MANUALLY UPDATE

APPROVALS		DATE
DRAWN	JM	2/27/92
CHECKED	DD	3/2/92
RESP ENG	CHB	3/2/92
MFG ENG	JR	3/2/92
QUAL ENG	HN	3/2/92

NEXT ASSY	USED ON
APPLICATION	

ANDERSON POWER PRODUCTS

CATALOG NUMBER 5915
PP75/ SB50 CONTACT
#10 AWG CABLE MAX.
HIGH DETENT

SIZE	SPECIFICATION:	REV.
A	1C0608S5	5

SCALE		
NONE	CADFILES/01050	SHEET 1 OF 1